DENKA L-MION

June 15 , 2003

Grade

- DENKA L-MION 120 Ga

Technical data

- Ion species : Gallium Ga^+ (DENKA L-MION 120 Ga)
- Operating temperature : room temperature
- Recommended vacuum for operation : < 5 x 10^{-7} Torr
- Mass of Gallium : ~15mg (corresponding to 4,500μA hr)
- Required electric power supply for pre-heating : 4A/3V max
- Pre-heating operation : filament current 3.2A, 45 sec

Drawing
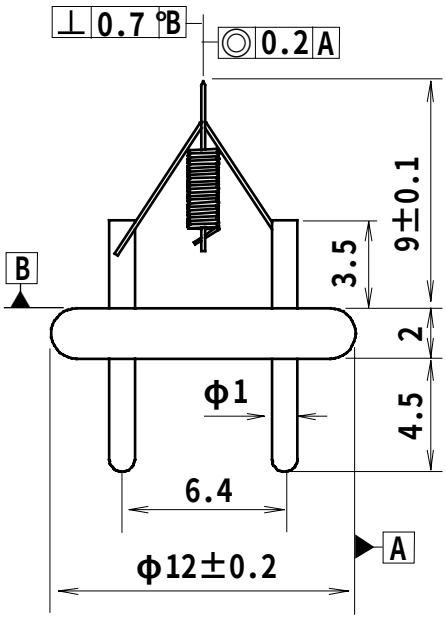
- Needle : W
- Reservoir : W
- Filament : W
- Base : Steatite ceramics